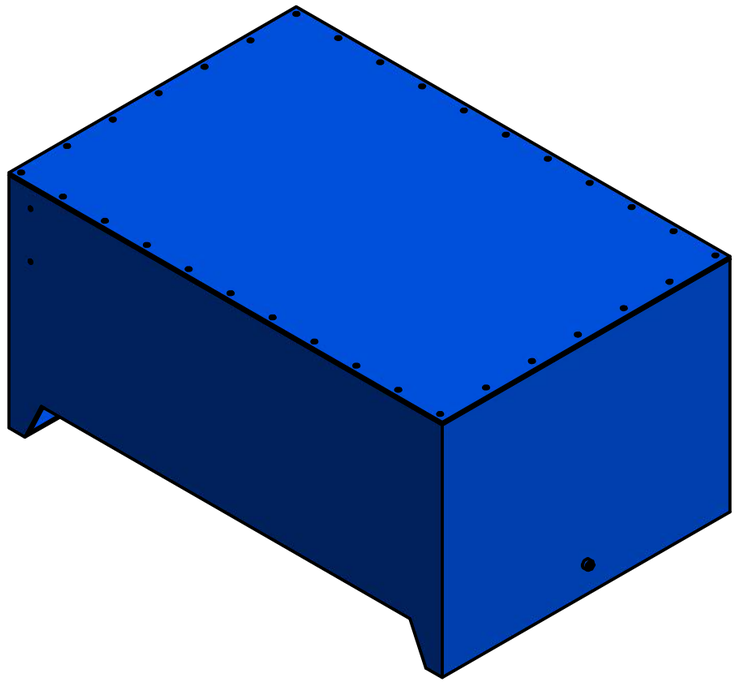

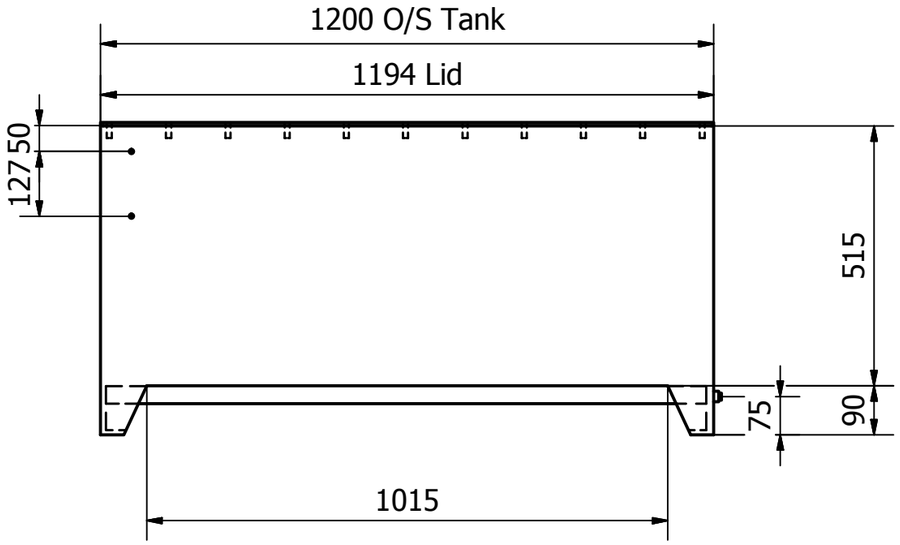


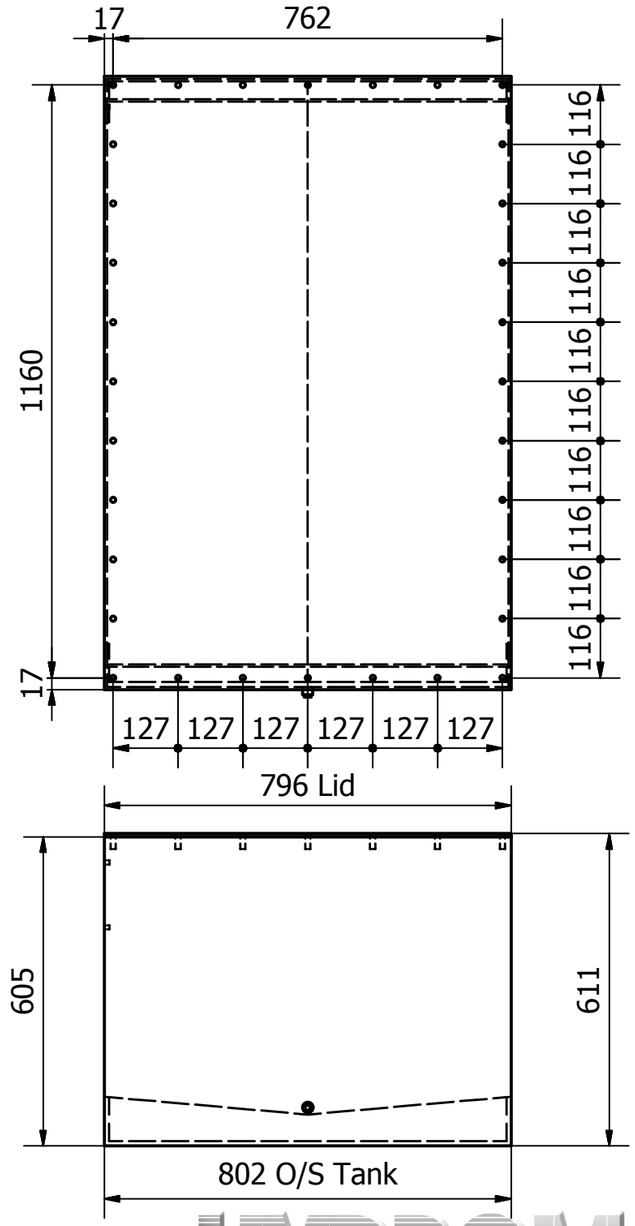


HYDROMOBILE


Tel: (011) 394-5837/8/9
Fax: (011) 975-6751
Visit us on the web:
www.hydromobile.co.za

41 Steel Road
Spartan
1620
Kempton Park


| Designed by | Checked by | Approved by | Date | | Date | |
|---|---|---|---|---|---|---|
| M.Bouwer | | | | | 2013/08/16 | |

| | | | |
|---|---|---|---|
| Hin-Tech | Hydraulic Tank 400L | | |
| | 1TN-ET400 | Edition | Sheet 1 / 1 |