FLUCOM ITALY

SOLENOID VALVES POPPET–TYPE DIRECTIONAL

TWO WAY TWO POSITION

ECD 28/22..

12.181

01.02

Technical features

02

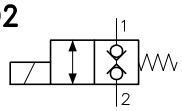

02–MO

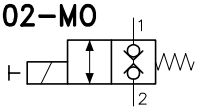

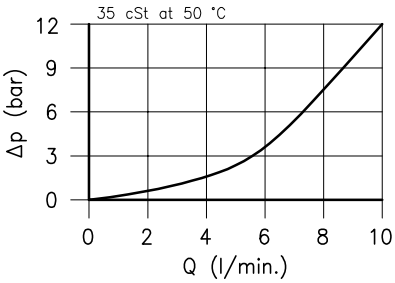

Cavity (For dimensions see catalogue 17.001)		S 28/2
Max. flow	(l/min.)	10
Max. pressure	(bar)	210
Response time It change in function of circuit, pressure, flow and fluid viscosity.	(ms)	20 – 40 (Mean value)
Fluid viscosity range	(cSt)	2.8 – 380
Fluid temperature range	(°C)	–20 +80
Mass	(kg)	0.120
Hydraulic fluid; mineral oil HM and HV ISO 6074		
Recommended filtration; 19/15 ISO 4466 (25 μ absolutes)		
Standard seals in Polyurethane and Buna N		

Dimensions

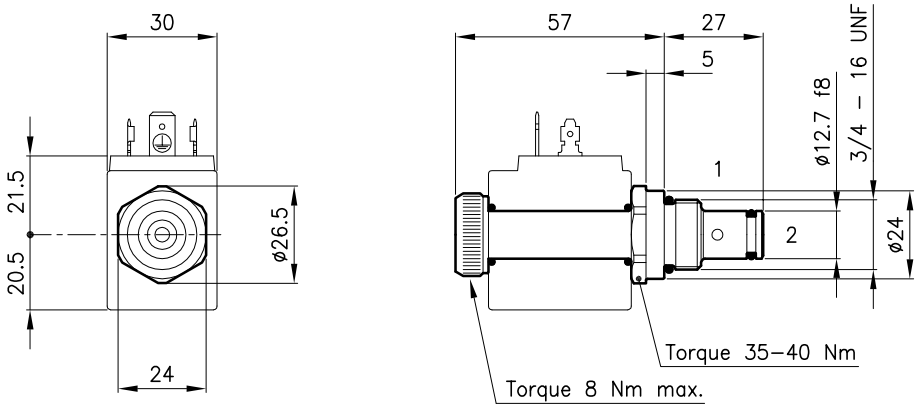

Ordering informations

ECD 28/2202–MO

ECD 28/22.. = Valve type

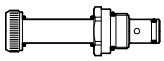

Circuits

2202 =

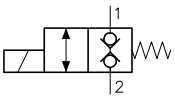

MO = Manual override
(Omit if not request)

Codes:

ECD 28/2202	25 011 172
ECD 28/2202–MO	25 011 171
External seals kit	90 620 113

ECD 28/22.. valves can be assembled on standard bodies 28–LO series; for dimensions see catalogue 16.020

On the ECD 28 valves must be assembled the Coils B28 series; for dimensions, features and codes see catalogue 09.902.