FLUCOM ITALY

PRESSURE RELIEF VALVES DUAL CROSS–LINE AND ANTI–CAVITATION CHECK

LPB 50/CSL 04

02.320

01.07

Technical features

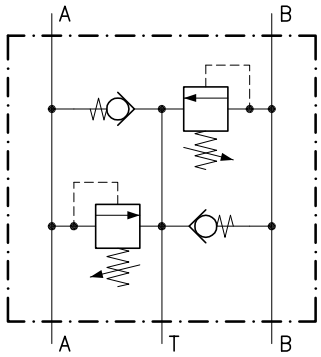

Valves	(For features see catalogue 02.100)	LPB 50
	(For features see catalogue 05.070)	CAE 50/P
Max. flow	(l/min.)	160
Max. Pressure	(bar)	350
Fluid viscosity range	(cSt)	2.8 – 380
Fluid temperature range	(°C)	–20 +80
Mass	(kg)	4.380
Cracking pressure 95% of setting value		
Reseat pressure 75% of setting value		
Cracking pressure defined with 1 l/min.		
Standard setting obtained with 10 l/min.		
Hydraulic fluid; mineral oil HM and HV ISO 6074		
Recommended filtration; 19/15 ISO 4466 (25 μ absolutes)		
Standard seals in Polyurethane and Buna N		

Dimensions

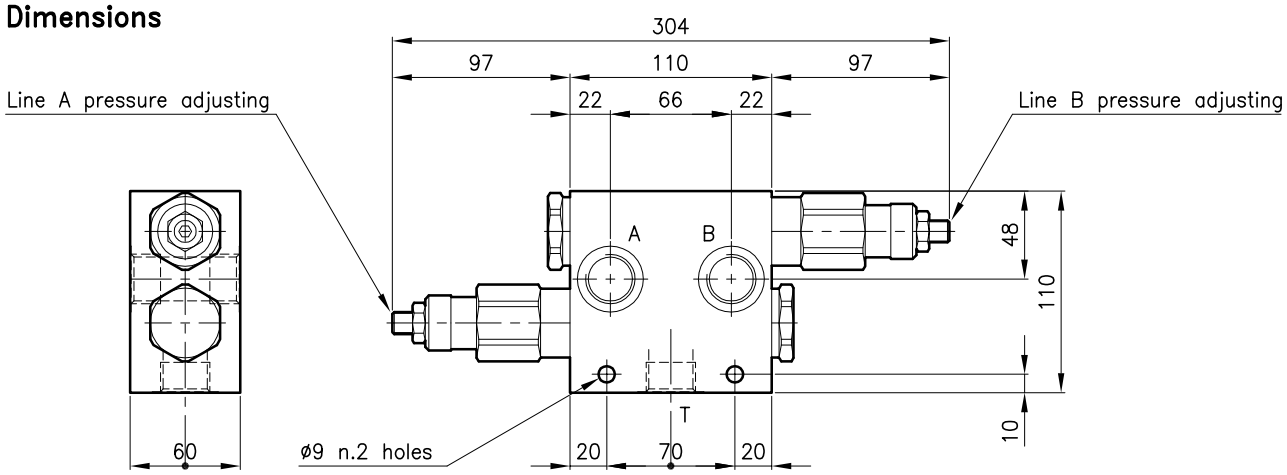

Ordering informations

LPB 50/T–N–CSL 04–B12

Valves type

Standard springs

Type		Setting range
U	=	10 – 105 bar
D	=	70 – 210 bar
T	=	140 – 350 bar

Adjustment type

N = Standard adjustment

Version

Standard ports

B12 = G 3/4 ISO 228

Codes:

LPB 50/U–N–CSL 04–B12	51 011 119
LPB 50/D–N–CSL 04–B12	51 011 120
LPB 50/T–N–CSL 04–B12	51 011 121

Only body code:

Body type 50–CSL 04–B12	58 144 115